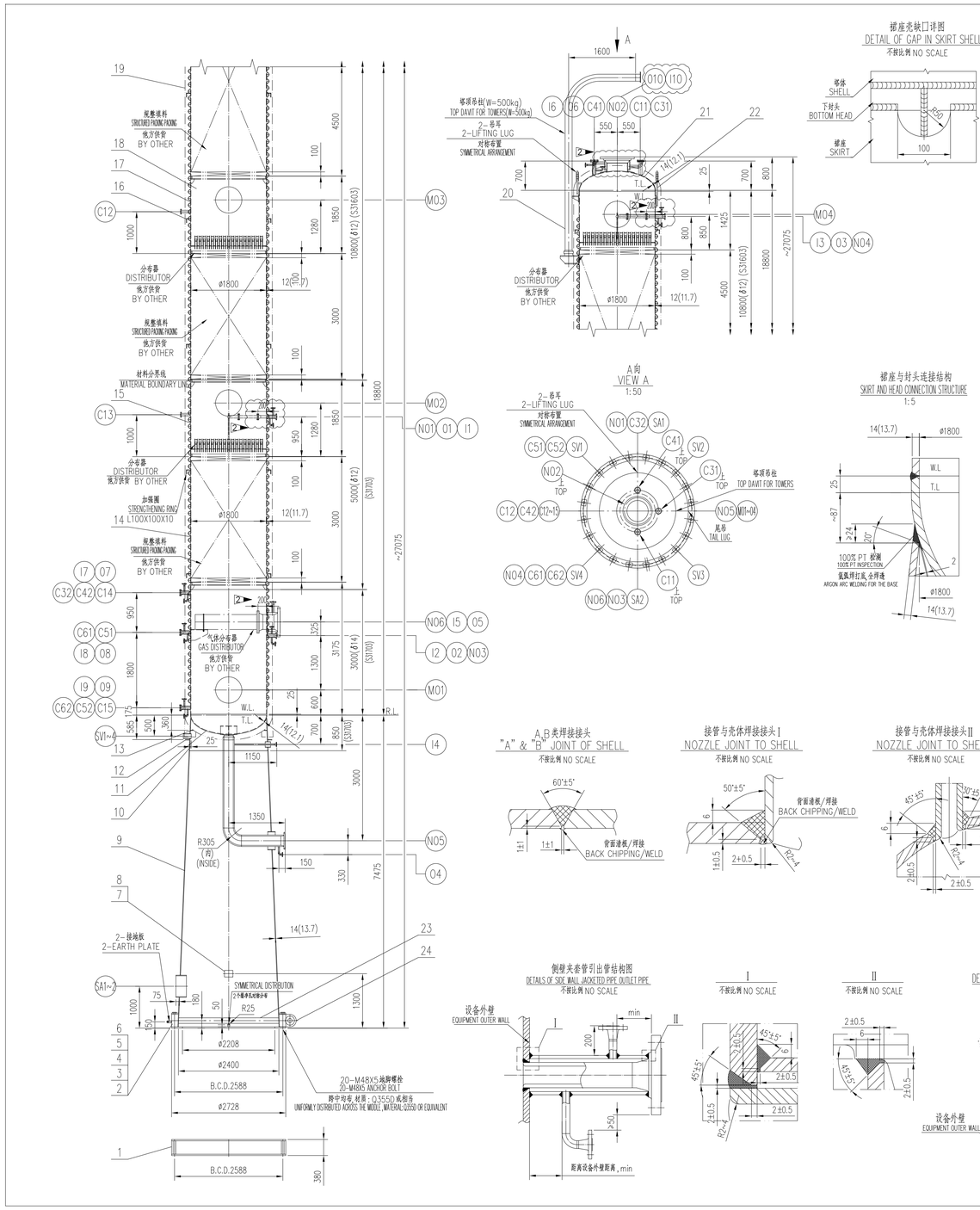

17. THE POSITIONS OF THE CONNECTING PIPE, ANCHOR BOLTS, LIFTING LUGS, NAMEPLATE, GROUNDING PLATE, AND TOP LADDER COLUMN ARE SHOWN IN THE PIPING LAYOUT DIAGRAM (THE DRAWING WILL BE SENT SEPARATELY).

18. THE EQUIPMENT SKIRT SHOULD BE COVERED WITH A FIRE-RESISTANT LAYER, AND ITS FIRE RESISTANCE LIMIT SHOULD NOT BE LESS THAN 2 HOURS. THE SPECIFIC REQUIREMENTS SHOULD FOLLOW ARTICLE 5.6 OF GB 50160-2008 "FIRE PROTECTION DESIGN STANDARD FOR PETROCHEMICAL ENTERPRISES" (2018 VERSION).

NOTE:

(1).PROCESS PIPE COMPOSITION (WT%):

- N01: NEOPENTYL GLYCOL 97.75, HYDROXY TEREPHTHALIC ACID/NEOPENTYL GLYCOL ESTER 1.08, ISOBUTYL ESTER 1.18.
- N02: NEOPENTYL GLYCOL 99.5, HYDROXY TEREPHTHALIC ACID/NEOPENTYL GLYCOL ESTER 0.2, ISOBUTYL ESTER 0.3.
- N05: NEOPENTYL GLYCOL 36.49, HYDROXY TEREPHTHALIC ACID/NEOPENTYL GLYCOL ESTER 31.68, ISOBUTYL ESTER 31.83.
- N04: NEOPENTYL GLYCOL 99.5, HYDROXY TEREPHTHALIC ACID/NEOPENTYL GLYCOL ESTER 0.2, ISOBUTYL ESTER 0.3.
- N06 (LIQUID): NEOPENTYL GLYCOL 36.49, HYDROXY TEREPHTHALIC ACID/NEOPENTYL GLYCOL ESTER 31.68, ISOBUTYL ESTER 31.83.
- N06 (GAS): NEOPENTYL GLYCOL 36.49, HYDROXY TEREPHTHALIC ACID/NEOPENTYL GLYCOL ESTER 31.68, ISOBUTYL ESTER 31.83.

(2). THE REINFORCEMENT RINGS ALSO SERVE AS INSULATION SUPPORTS, MADE OF MATERIAL S31603, WITH SPECIFICATIONS OF L100X10. THE SPACING IS APPROXIMATELY 3000mm PER RING AND MUST NOT BE INTERRUPTED. WHEN ENCOUNTERING PIPE OPENINGS AND PLATFORM BRACKETS, THE RINGS CAN MOVE UP AND DOWN. THE MAXIMUM SPACING SHOULD NOT EXCEED 3500mm.

(3). THE PLATFORMS, LADDERS, PIPE RACK BRACKETS (INCLUDING BASE PLATES AND THEIR ACCESSORIES) WELDED TO THE EQUIPMENT BODY, AS WELL AS OTHER PRE-WELDED COMPONENTS, SHALL BE DESIGNED AND SUPPLIED BY THE MANUFACTURER. THE EQUIPMENT'S WEIGHT INCLUDES THE PRE-WELDED COMPONENTS OUTSIDE THE TOWER, WHILE THE PRE-WELDED COMPONENTS INSIDE THE TOWER ARE DESIGNED BY THE INTERNAL COMPONENTS MANUFACTURER AND SUPPLIED BY THE TOWER EQUIPMENT MANUFACTURER. THE WEIGHT OF THE PRE-WELDED COMPONENTS OUTSIDE THE TOWER IS APPROXIMATELY 1000 KG, AND THE WEIGHT OF THE PRE-WELDED COMPONENTS INSIDE THE TOWER IS APPROXIMATELY 500 KG.

(4). ALL SIDE-MOUNTED PRESSURE GAUGES ARE REQUIRED TO MEASURE THE GAS PHASE. THE PRESSURE MEASUREMENT POINTS SHOULD BE INSTALLED IN AN UPWARD DIRECTION TO AVOID LIQUID ACCUMULATION.

(5). THE FOLLOWING PIPE OPENINGS REQUIRE HEAT TRACING, WITH THE SPECIFICATIONS AS FOLLOWS:

N01 PIPE HEAT TRACING INLET IS I1, HEAT TRACING OUTLET IS O1, HEAT TRACING PIPE SPECIFICATION IS 1/2", CONNECTION PIPE SPECIFICATION IS ø21.3X3.73;

N02 PIPE HEAT TRACING INLET IS I10, HEAT TRACING OUTLET IS O10, HEAT TRACING PIPE SPECIFICATION IS 2", CONNECTION PIPE SPECIFICATION IS ø60.3X5.54;

N03 PIPE HEAT TRACING INLET IS I2, HEAT TRACING OUTLET IS O2, HEAT TRACING PIPE SPECIFICATION IS 1/2", CONNECTION PIPE SPECIFICATION IS ø21.3X3.73;

N04 PIPE HEAT TRACING INLET IS I3, HEAT TRACING OUTLET IS O3, HEAT TRACING PIPE SPECIFICATION IS 1/2", CONNECTION PIPE SPECIFICATION IS ø21.3X3.73;

N05 PIPE HEAT TRACING INLET IS I4, HEAT TRACING OUTLET IS O4, HEAT TRACING PIPE SPECIFICATION IS 1", CONNECTION PIPE SPECIFICATION IS ø33.4X4.55;

N06 PIPE HEAT TRACING INLET IS I5, HEAT TRACING OUTLET IS O5, HEAT TRACING PIPE SPECIFICATION IS 2", CONNECTION PIPE SPECIFICATION IS ø60.3X5.54;

C41~42 PIPE HEAT TRACING INLET IS I6~7, HEAT TRACING OUTLET IS O6~7, HEAT TRACING PIPE SPECIFICATION IS 1/2", CONNECTION PIPE SPECIFICATION IS ø21.3X3.73;

C61~62 PIPE HEAT TRACING INLET IS I8~9, HEAT TRACING OUTLET IS O8~9, HEAT TRACING PIPE SPECIFICATION IS 1/2", CONNECTION PIPE SPECIFICATION IS ø21.3X3.73.

(6). THE ENTIRE TOWER (EXCLUDING THE HEAD) USES EXTERNAL HALF-TUBE HEATING. THE SPECIFICATION OF THE HALF-TUBE IS DN100, WITH A CENTER SPACING OF 160mm, AND THE LENGTH OF EACH SECTION OF THE HALF-TUBE SHOULD NOT EXCEED 50m. WHEN VIEWED FROM ABOVE, THE HALF-TUBE IS WOUND CLOCKWISE. IF IT IS IMPOSSIBLE TO AVOID CONNECTING TO THE PIPE OR OBSTACLES, DN32 PIPES CAN BE USED FOR CONNECTION.

(7). THE LIFTING METHOD OF THIS EQUIPMENT SHALL BE DETERMINED THROUGH CONSULTATION BETWEEN THE MANUFACTURER, THE OWNER, AND THE INSTALLATION UNIT, TO FINALIZE THE FORM AND SIZE OF THE LIFTING LUGS.

(8). THE ANGLE BETWEEN THE TOWER TOP LIFTING LUG AND THE MANHOLE SHALL NOT EXCEED 90°, AND THE ANGLE BETWEEN THE LIFTING LUG AND THE TAILING LUG SHALL BE 90°.

(9).THE N1 NOZZLE IS CONFIGURED AS A LIQUID DISTRIBUTION NOZZLE, DESIGNED AND SUPPLIED BY THE TOWER INTERNALS MANUFACTURER. THE N05 NOZZLE IS EQUIPPED WITH AN ANTI-VORTEX NOZZLE.

(10).IF A HORIZONTAL HYDRAULIC TEST IS CONDUCTED, EFFECTIVE MEASURES MUST BE TAKEN TO PREVENT EQUIPMENT DEFORMATION.

技术要求
GENERAL NOTES

1. 除注明外，所有尺寸单位为*mm*，厚度尺寸标注中括号内尺寸为最小成形厚度（材料订购厚度应不小于名义厚度且应考虑加工裕量，保证最小成形厚度满足要求）。法兰螺栓孔应跨设备中心线或其平行线期中均布。
2. S31603和S31703材料及其焊接接头（包括焊接工艺评定、产品焊接试件）按GB/T4334-2020方法B法进行晶间腐蚀试验，平均腐蚀速率应不大于1.6g/m²·h，腐蚀试样取样部位应按GB/T 21433-2008第6条规定进行。
3. 与工艺介质接触的焊缝应采用氩弧焊盖面且保持焊态。
4. 采用无缝钢管制接管厚度负偏差不大于10%S(S为接管厚度)。
5. 塔体同一断面上相最大内径与最小内径之差应不大于16mm。
6. 塔体组焊完毕后，直线度GB/T 150.4-2011第6.5.11条检查壳体的圆度。
7. 筒体任意3000mm长度的直线度偏差不得大于3mm，塔体总的直线度偏差不得大于19mm。
8. 塔体安装垂直度偏差不得大于20mm。
9. 裙座端部螺栓孔中心圆直径允差以及相邻两孔相位弯距允差允许公差±3mm。
10. 裙座设计计算按其它公法和GB/T 20584-2020中14.2.13条各条规定。
11. DN<250的接管与法兰的对接接头应按照JB/T 47013.5-2015进行100%渗透检测，合格级别不低于I级。
12. 内部非受压的对接接头应进行100%射线检测，合格级别不低于II级。
13. 非焊接部位应设备去压试验后进行，非焊接部位无焊对接焊缝，应用角焊缝，并采用合理的施工顺序减少焊接残余应力
14. 不锈钢设备去压试验用水的氯离子含量应小于25mg/L，试验合格后立即将去离子水排空。
15. 裙压试验合格后，外表面触控不锈钢表面处理行酸洗钝化处理，用原此的电化膜按GB/T 25150-2010规定的方法检测，合格后应保持酸液分离法压于净，不得有残留。
16. 裙座端部螺栓采用地脚螺栓基础裙板组合，基础裙板与裙座底板一起配后螺栓孔，基础裙板需提前放位安装所需。
17. 接管、地脚螺栓、吊耳、铭牌、接地板、塔顶吊柱等方位及形状详见管道平面布置图（图纸另发）。
18. 设备裙座设置盖板大层，其相大板厚不强于2h，其保要求按GB 50160-2008《石油化工企业设计防火标准》（2018年版）第6.6条。

注：(1) 工艺管口组合wt%：

N01口：新戊二醇97.75,羟基特戊酸/新戊二醇酯1.08,异丁酸酯1.18.

N02口：新戊二醇99.5,羟基特戊酸/新戊二醇酯0.2,异丁酸酯0.3.

N05口：新戊二醇36.49,羟基特戊酸/新戊二醇酯31.68,异丁酸酯31.83.

N04口：新戊二醇99.5,羟基特戊酸/新戊二醇酯0.2,异丁酸酯0.3.

N06口(液)：新戊二醇36.49,羟基特戊酸/新戊二醇酯31.68,异丁酸酯31.83.

N06口(气)：新戊二醇36.49,羟基特戊酸/新戊二醇酯31.68,异丁酸酯31.83.

(2) 加强圈表面保温支撑，材质为S31603,角钢为L100X10,间距：~3000mm/圈，不得断开，难间部口和干台支耳可上下移动，最大间距不得超过3500mm。

(3) 与设备本体相焊接的平台、爬梯、管廊支耳（全轴板及其部件）等预焊件由制造厂设计并供货；设备重心分部件预焊件，部分预焊件由合作厂设计并器制造厂供货，其中部件预焊件~1000kg,部分预焊件~500kg。

(4) 所有侧装压力表要求测气相，测压点斜向上安装，避免积液。

(5) 以下管口需专件热，其规格如下：

N03管口伴热入口热电偶口为0.5-，伴热出口为0.5-，伴热管口规格为1/2"，接管规格为ø21.3X3.73。

N02管口伴热入口热电偶口为0.5-，伴热出口为0.5-，伴热管口规格为2"，接管规格为ø60.3X5.54；

N03管口伴热入口为2，伴热出口为02，伴热管口规格为1/2"，接管规格为ø21.3X3.73；

N04管口伴热入口为3，伴热出口为03，伴热管口规格为1/2"，接管规格为ø21.3X3.73；

N05管口伴热入口为4，伴热出口为04，伴热管口规格为1"，接管规格为ø33.4X4.55；

N06管口伴热入口为5，伴热出口为05，伴热管口规格为2"，接管规格为ø60.3X5.54；

C41~42管口伴热入口为6~7，伴热出口为06~7，伴热管口规格为1/2"，接管规格为ø21.3X3.73；

C61~62管口伴热入口为8~9，伴热出口为08~9，伴热管口规格为1/2"，接管规格为ø21.3X3.73；

(6) 全氧(不含封头)采用外非管伴热，外管规格DN100,中心线距到160mm,外管每段不超过50m.外管从上往下看，外管为顺时针盘绕,通到接管与裙座物块不得可用DN32管连接.

(7). 本设备非定形尖由制造厂和业主及安装单位协商确定 以最终确定吊耳的形式与大小。

(8). 塔顶吊柱与人孔的夹角不大于90°,吊耳与尾吊夹角为90°.

(9). N1口设液体分布口 由塔内件厂商设计并供货。N05口即被洞口。

(10).若塔气水压试验需采取有效防漏防止设备变形.

1. ALL DIMENSIONS ARE IN MM UNLESS OTHERWISE SPECIFIED. THICKNESS SPECIFIED IN THE BRACKETS FOR BASE MATERIAL ARE THE MINIMUM ACCEPTABLE AFTER FABRICATION (THE ORDERED MATERIAL THICKNESS SHOULD NOT BE LESS THAN THE NOMINAL THICKNESS AND MUST ACCOUNT FOR PROCESSING TOLERANCES, ENSURING THAT THE MINIMUM FORMING THICKNESS MEETS THE REQUIREMENTS). FLANGE BOLT HOLES SHOULD BE EVENLY DISTRIBUTED ALONG THE CENTERLINE OR PARALLEL LINES OF THE EQUIPMENT.
2. THE S31603 AND S31703 MATERIALS AND THEIR WELDED JOINTS (INCLUDING WELDING PROCEDURE QUALIFICATION AND PRODUCT WELDING SPECIMENS) SHALL UNDERGO INTERGRANULAR CORROSION TESTING IN ACCORDANCE WITH GB/T 4334-2020 METHOD B. THE AVERAGE CORROSION RATE SHOULD NOT EXCEED 1.6 G/M² · H. SAMPLING AND GROUPING OF CORROSION SPECIMENS SHALL BE CONDUCTED ACCORDING TO THE PROVISIONS OF ARTICLE 8 OF GB/T 21433-2008.
3. THE WELDS IN CONTACT WITH THE PROCESS MEDIUM SHALL BE COMPLETED USING GTAW (GAS TUNGSTEN ARC WELDING) FOR THE SURFACE LAYER, AND THE WELDED STATE MUST BE MAINTAINED.
4. THE NEGATIVE DEVIATION OF THE PIPE THICKNESS FOR THE SEAMLESS STEEL PIPE CONNECTION SHALL NOT EXCEED 10% OF S (S IS THE PIPE WALL THICKNESS).
5. THE DIFFERENCE BETWEEN THE MAXIMUM AND MINIMUM INNER DIAMETERS ON THE SAME SECTION OF THE TOWER BODY SHOULD NOT EXCEED 18 MM.
6. AFTER THE ASSEMBLY WELDING OF THE TOWER BODY IS COMPLETED, THE ROUNDNESS OF THE SHELL SHOULD BE CHECKED IN ACCORDANCE WITH SECTION 6.5.11 OF GB/T 150.4-2011.
7. THE STRAIGHTNESS DEVIATION OF ANY 3000MM LENGTH OF THE CYLINDER BODY SHALL NOT EXCEED 3MM, AND THE TOTAL STRAIGHTNESS DEVIATION OF THE TOWER BODY SHALL NOT EXCEED 19MM.
8. THE VERTICALITY DEVIATION OF THE TOWER BODY DURING INSTALLATION SHALL NOT EXCEED 20 MM.
9. THE TOLERANCE FOR THE CENTER CIRCLE DIAMETER OF THE ANCHOR BOLT HOLES IN THE SKIRT SEAT, AS WELL AS THE TOLERANCE FOR THE CHORD LENGTH BETWEEN ADJACENT HOLES AND ANY TWO HOLES, SHALL NOT EXCEED ±3 MM.
10. THE INSTALLATION DIMENSIONAL TOLERANCE FOR THE LOCAL LIQUID LEVEL GAUGE PIPE OPENING SHALL BE IN ACCORDANCE WITH THE PROVISIONS OF ARTICLE 6, SECTION 14.2.13 OF HG/T 20584-2020.
11. FOR NOZZLES WITH DN<250, THE BUTT WELD JOINTS WITH FLANGES SHALL UNDERGO 100% PT IN ACCORDANCE WITH NB/T 47013.5-2015, WITH AN ACCEPTANCE CLASS NOT LOWER THAN CLASS I.
12. ALL BUTT JOINTS OF THE EXTERNAL HALF-PIPES SHALL UNDERGO 100% RT, WITH A QUALIFICATION LEVEL NO LOWER THAN GRADE II.
13. THE WELDING OF THE HALF PIPE SHOULD BE CARRIED OUT AFTER THE EQUIPMENT HYDROSTATIC TEST. THE WELDING OF THE HALF PIPE SHOULD FIRST WELD THE BUTT WELDS, THEN THE FILLET WELDS, AND A REASONABLE CONSTRUCTION SEQUENCE SHOULD BE ADOPTED TO REDUCE WELDING RESIDUAL STRESS.
14. THE CHLORIDE ION CONTENT OF THE WATER USED FOR HYDROSTATIC TESTING OF STAINLESS STEEL EQUIPMENT SHALL BE LESS THAN 25 mg/L. AFTER PASSING THE TEST, THE WATER SHOULD BE DRAINED AND THE EQUIPMENT IMMEDIATELY DRIED.
15. AFTER PASSING THE PRESSURE TEST, THE STAINLESS STEEL SURFACES IN CONTACT WITH THE MEDIUM SHALL BE PICKLED AND PASSIVATED. THE PASSIVATION FILM FORMED SHALL BE TESTED ACCORDING TO THE METHOD SPECIFIED IN GB/T 25150-2010. AFTER PASSING THE TEST, THE PICKLING MEDIUM MUST BE THOROUGHLY CLEANED, WITH NO RESIDUES REMAINING.
16. THE ANCHOR BOLTS FOR THE SKIRT BASE SHOULD BE POSITIONED USING AN ANCHOR BOLT FOUNDATION TEMPLATE. THE FOUNDATION TEMPLATE AND THE SKIRT BASE PLATE SHOULD BE DRILLED FOR THE BOLT HOLES TOGETHER. THE FOUNDATION TEMPLATE MUST BE SENT TO THE INSTALLATION SITE IN ADVANCE.

接管载荷表
NOZZLE LOAD TABLE

接管 NOZZLE	P (N)	VC / V1 (N)	VL / V2 (N)	MC / M1 (N·m)	MT / Mt (N·m)	ML / M2 (N·m)
N02(60%)	14400	10800	24400	14400	21600	18720
N05	9600	7200	9600	3840	5760	4992
N06	19600	14700	19600	13720	20580	17836
--	--	--	--	--	--	--
--	--	--	--	--	--	--

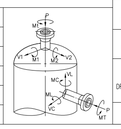

设计制造检验主要数据表
DESIGN/FABRICATION/INSPECTION DATA

标准规范 STANDARD AND CODE		设计参数 DESIGN DATA			
● 固定式压力容器安全技术监察规程 SUPERVISION REGULATION ON SAFETY TECHNOLOGY FOR STATIONARY PRESSURE VESSEL	TSG 21-2016(含第1号修改单)	压力容器类别/级别 CATEGORY / LEVEL OF PRESSURE VESSEL		Ⅱ/D	
● 压力容器 PRESSURE VESSELS	GB/T 150.1~150.4-2024	设计使用年限 DESIGN SERVICE LIFE	年 YEAR	15	
● 塔式容器 VERTICAL VESSELS SUPPORTED BY SKIRT	NB/T 47041-2014	换热面积 HEAT TRANSFER SURFACE	m^2	~65	
● 钢制化工容器制造技术规范 TECHNICAL STANDARD OF FABRICATION FOR STEEL CHEMICAL VESSELS	HG/T 20584-2020			盘管 COIL	壳体 SHELL
		设计压力 DESIGN PRESSURE	kg/cm²G	22/-1	5.1/-1
		工作压力 OPERATING PRESSURE	kg/cm²G	20	-0.998(真)/-0.806(真)
主要规范 MAIN REQUIREMENT	NB/T 47014~47015-2023, NB/T 47018.2-2017, GB/T 324-2008	最高允许工作压力 MAWP	kg/cm²G	--	--
	E316L-16(S31603),E317L-16(S31703) , E5015(Q345R)	设计温度 DESIGN TEMPERATURE	℃	250	220
	除注明外，焊接系用连续焊，角焊缝的焊脚尺寸按较薄板厚度，法兰与接管焊接按相关法兰	工作温度 OPERATING TEMPERATURE	℃	215~230	150(蒸)/180(真)
	的规范要求;OTHERWISE SPECIFIED IN THE DRAWING, CONTINUOUS WELD SHALL BE PERFORMED. THE LEG OF FILLET WELDS SHALL BE EQUAL TO THE THINNER PLATE; THE WELDING OF FLANGE SHALL BE IN ACCORDANCE WITH RELEVANT STANDARD.	工作介质 SERVICE FLUID		蒸汽 STEAM	NPG TOWER FEED
焊接接头类别 JOINT CATEGORY	检测方法/技术等级/比例/质量等级 METHOD / TECH. GRADE / RATIO/QUALITY GRADE	介质密度 FLUID DENSITY	kg/m^3	--	0.34(V)/924(L)
无损检测 NDT	A、B	RT/AB/100%Ⅱ		介质特性 FLUID CHARACTERISTIC	--/-- 轻度易爆/易燃 MODERATE EXPLOSIVE/FLAMMABLE
		--		腐蚀裕量 CORROSION ALLOWANCE	mm 0	碳钢0，碳钢2.0 SKILL 0，SKIT 2.0
	C、D、E	PT/--/100%/Ⅰ(SS)		焊接接头系数 JOINT EFFICIENCY	1.0	1.0
		MT/--/100%/Ⅰ(CS)		容积 VOLUME	m^3 2.66	49.3
		RT/UT/--/100%/Ⅱ (DN>250,按图纸表)		装量系数 FILLING RATIO	--	--
热处理要求 HEAT TREATMENT	--			基本风压 REFERENCE WIND PRESSURE	Pa 400	
耐压试验压力 kg/cm²G PRESSURE TESTING	SHELL：8.34/6.4(HYDRO,一阶段H/二阶段V) COIL：33(HYDRO)			地面粗糙度 TERRAIN ROUGHNESS	A	
泄漏试验压力 kg/cm²G PRESSURE OF LEAK TEST	--			抗震设防烈度(加速度) SEISMIC FORTIFICATION INTENSITY(ACCELERATION)	7(0.15g)	
涂覆与运输包装 COATING/PAINTING FOR TRANSPORT	NB/T 10558-2021，22150-00000-MC08	设计地震分组 DESIGN EARTHQUAKE GROUP		第三组 GROUP 3	
设备自重 NET WEIGHT	kg 28500	操作状态 OPERATING	正常操作 NOR.OPERATING	kg --	
其中 INCLUDING	kg 22100(SS)		最大操作 MAX.OPERATING	kg --	
	--	水压试验状态 HYDROTEST	充水 FULL OF WATER	kg 49300	
场地土类别 SITE-CLASS				Ⅲ	
当地气象条件 LOCAL CLIMATE CONDITION				月平均最低气温的最低值 AVERAGE MIN. TEMPERATURE OF MONTH	21
保温 INSULATION	内部 INTERNAL	--		绝热厚度 INSULATION THK.	mm --	120(硅酸铝纤维) DSI(ALUMINUM SILICATE)
	外部 EXTERNAL	3100(保温)		防火 FIRE PREVENTION	要(裙座) YES(SKIRT)	
其它 OTHER		--		超压泄放装置 PRESSURE RELIEF DEVICE	--	

注：1. NB/T 47013.1~47013.2-2015(含修改单)，NB/T 47013.3-2023，NB/T 47013.4~47013.5-2015，NB/T 47013.10-2015.
Note: 1. NB/T 47013.1~47013.2-2015 (including amendment order), NB/T 47013.3-2023, NB/T 47013.4~47013.5-2015, NB/T 47013.10-2015.

管口表
NOZZLE TABLE

符号 SYMBOL	用途或名称 SERVICE	数量 QTY.	公称尺寸 NPS	公称压力 RATING	连接标准及形式 STANDARD AND TYPE/FACE	接管规格 NECK SIZE	接管长度 PROJECTION
N01	物料入口 INLET	1	2"X3"	Class150	SH/T3426 WN/RF	ø60.3X8.74/ ø88.9X7.62	1180
N02	气体出口 VAPOR OUTLET	1	20"×24"	Class150	SH/T3426 WN/RF	ø508X12/ ø610X14	见图 SEE DRAW
N03	底部返回口 BOTTOM RETURN	1	2"X3"	Class300	SH/T3426 WN/RF	ø60.3X8.74/ ø88.9X7.62	1180
N04	回流口 REFLUX CONNECTION	1	2"X3"	Class300	SH/T3426 WN/RF	ø60.3X8.74/ ø88.9X7.62	1180
N05	底部出口 BOTTOM OUTLET	1	8"X10"	Class150	SH/T3426 WN/RF	ø219.1X8.18/ ø273X9.27	见图 SEE DRAW
N06	再沸器返流口 REBOILER RETURN	1	14"X18"	Class300	SH/T3426 WN/RF	ø355.6X12/ ø457X12	1250
M01~04	人孔 MANHOLE	4	24"	PN16	HG/T 21521 WN/RF	ø630X14	按标准 AS PER CODE
C11~15	温度计接口(带法兰盖) TI CONNECTION(W/B)	5	1 1/2"	Class150	ASME B16.5 LWN/RF	ø65X12	见图(C11)/见图(C12~15) SEE DRAW(C11)/SEE(C12~15)
C31~32	冷阱氢杂质接口(带法兰盖) IPI CONNECTION(W/B)	2	2"	Class150	ASME B16.5 LWN/RF	ø78X13	见图(C31)/见图(C32) SEE DRAW(C31)/SEE(C32)
C41~42	氢氧化杂质接口(带法兰盖) PG CONNECTION(W/B)	2	2"X3"	Class150	SH/T3426 WN/RF	ø60.3X8.74/ ø88.9X7.62	见图(C41)/见图(C42) SEE DRAW(C41)/SEE(C42)
C51~52	冷阱液位计接口(带法兰盖) LI CONNECTION(W/B)	2	3"	Class150	ASME B16.5 WN/RF	ø88.9X7.62	1180
C61~62	氢氧化液位计接口(带法兰盖) LG CONNECTION(W/B)	2	2"X3"	Class150	SH/T3426 WN/RF	ø60.3X8.74/ ø88.9X7.62	1180
SV1~4	排气孔 EXHAUST PORT	4	80	--	--	ø89X4	--
SA1~2	检查孔 CHECK HOLE	2	500	--	--	ø528X14	--
E1~14	蒸汽进口 STEAM INLET	14	1"	CLass300	ASME B16.5 WN/RF	ø33.4X4.55	1190
F1~14	蒸汽出口 STEAM OUTLET	14	1"	CLass300	ASME B16.5 WN/RF	ø33.4X4.55	1190
I1~10	伴热入口 ACCOMPANYING HEAT INLET	10	注5 Note5	CLass150	ASME B16.5 WN/RF	注5 Note5	见图
O1~10	伴热出口 ACCOMPANYING HEATING EXPORT	10	注5 Note5	CLass150	ASME B16.5 WN/RF	注5 Note5	见图

注：1) 除图面另有注明外，筒体上接管长度是指设备中心线到法兰密封面的距离。
NOTES: EXCEPT INDICATED ON THE DWG. THE PROJECTION IS THE DIMENSION FROM FLANGE SURFACE TO EQUIPMENT CENTER LINE.

特性表
CHARACTERISTIC TABLE

填料 PACKING	型式 TYPE	规格 SIZE	堆积密度 DENSITY kg/m³	高度 HEIGHT	层数 LAYERS	体积 VOLUME, m³
	STRUCTURED PACKING	--	--	3000X2+4500	3	26.7

主要材料表
MAIN MATERIALS LIST

筒体，封头 SHELL，HEAD	S31603(GB/T 713.7-2023) S31703(GB/T 713.7-2023)	盘管 COIL	S30403(GB/T 713.7-2023)
管法兰（老体） NOZZLE FLANGE (SHELL)	S31603Ⅱ(NB/T 47010-2017) S31703Ⅱ(NB/T 47010-2017)	接管（老体） NOZZLE PIPE (SHELL)	S31603/S31703(GB/T 14976-2012) S31603/S31703(GB/T 713.7-2023)
管法兰（盘管） NOZZLE FLANGE (COIL)	S30403Ⅱ(NB/T 47010-2017)	接管（盘管） NOZZLE PIPE (COIL)	S30403(GB/T 14976-2012)
法兰盖 BLIND FLANGE	S31603Ⅱ(NB/T 47010-2017) S31703Ⅱ(NB/T 47010-2017)		

版次 REV.	日期 DATE	说明 DESCRIPTION	设计 DSGD	校核 CHEKD	审核 APPRO	批准 AUTHO	标准化 STANDARDIZATION
2	2025.5.7	按5.7审图意见					
1	2025.4.16	按4.15审图意见					
0	2025.2.20	按工程图 REV.D00					

本图纸为江阴市科博机械有限公司财产，未经本企业许可不得转让给第三者或复制.
THIS DRAWING IS THE PROPERTY OF JIANGYIN KEBO MACHINERY CO.,LTD., UNAUTHORIZED DISCLOSURE TO ANY THIRD PARTY OR DUPLICATION IS NOT PERMITTED.

江阴市科博机械有限公司 Jiangyin Kebo Machinery Co.,Ltd.		用户 CLIENT	PT PETRO OXO NUSANTARA
图名 DRAWING NAME	2▶ NPG塔 NPG TOWER 装配图/ASSEMBLY DRAWING ITEM NO.: T-2402	项目 PROJ.	30000 TPA NEOPENTYL GLYCOL PROJECT
		装置 PLANT:	Neopentyl Glycol Plant
比例 SCALE	1 :50	第 1 张，共 3 张 PAGE 1 OF 3	图号 DRAWING NO. JKB-S2504-00(1/2)

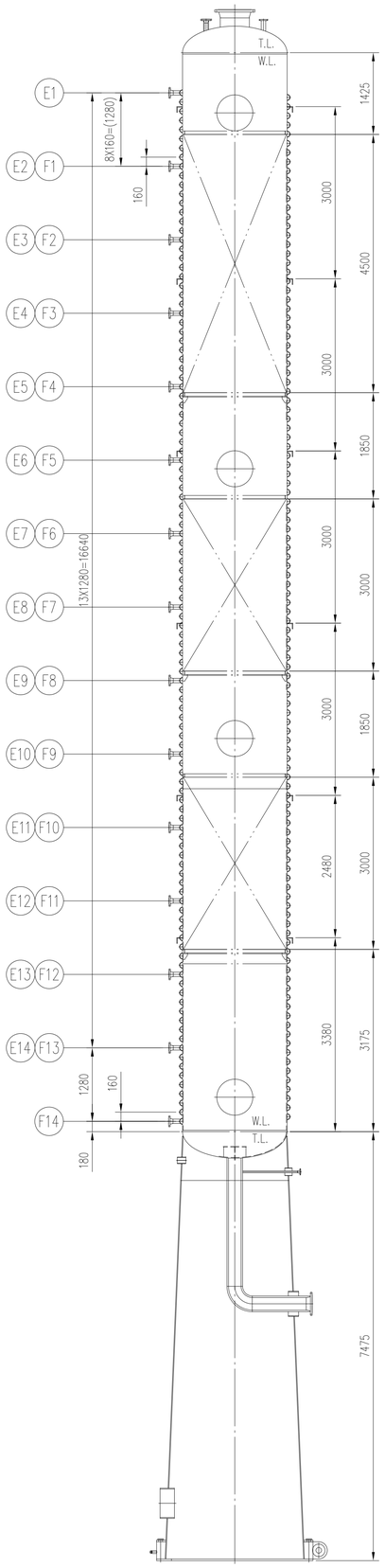

伴热盘管俯视详图
TOP VIEW DETAILS OF HEATING COIL
1:5

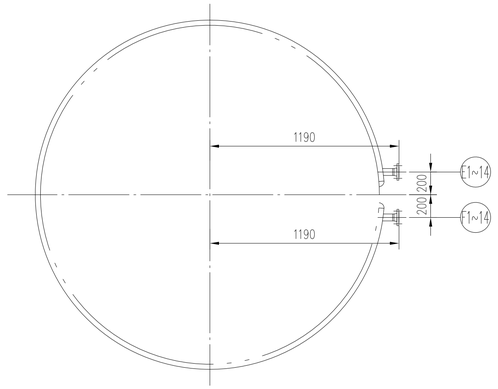

半管遇大接管示意图
SCHEMATIC DIAGRAM OF HALF PIPE MEETING LARGE NOZZLE
1:5

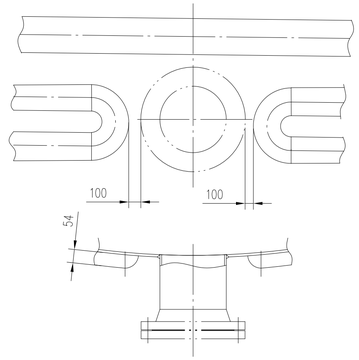

伴热盘管示意图
SCHEMATIC DIAGRAM OF HEATING HALF PRE COIL
1:5

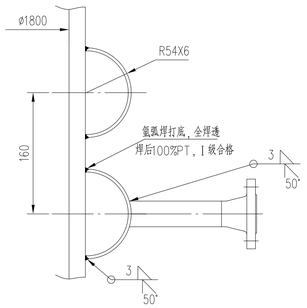

地脚螺栓座详图
DETAILED DRAWING OF THE ANCHOR BOLT BASE
1:10

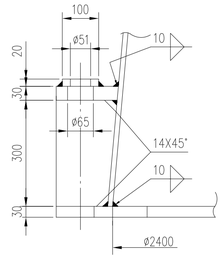

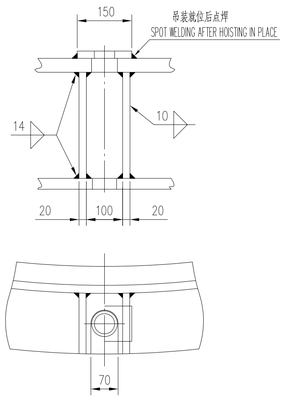

伴热蒸汽入口/出口端部示意图
SCHEMATIC DIAGRAM OF INLET/OUTLET END OF HEAT TRACING STEAM
1:5

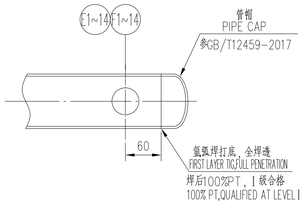

接地板详图
EARTH PLATE
1:4

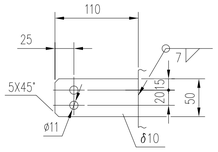

N05&I4口引出孔结构详图
DETAIL OF N05&I4 OUTLET HOLE STRUCTURE
不按比例 NO SCALE

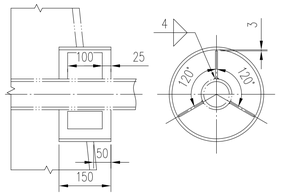

N05防涡流挡板详图
DETAIL OF N05 BREAKING VORTEX PLATE
不按比例 NO SCALE

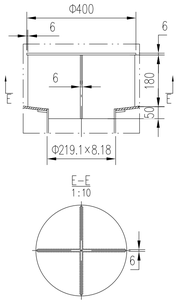

N02,06夹套管封口详图
DETAIL OF N02,06 SEALING PLATE JOINT TO PIPE
不按比例 NO SCALE

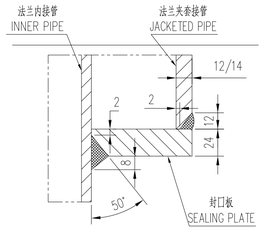

I10 O10	GB/T12459-2017	弯头 2" -Sch80S 90E(L) ELBOW	1	S31603		0.9	
		接管 Φ60.3×5.54 L=172 PIPE	1	S31603		1.3	
		接管 Φ60.3×5.54 L=152 PIPE	1	S31603		1.15	
	ASME B 16.5-2020	法兰 2" -Class150 WN/RF S=5.54 FLANGE	2	S31603Ⅱ	2.72	5.44	

I5 O5	GB/T12459-2017	弯头 2" -Sch80S 90E(L) ELBOW	1	S31703		0.9	
		接管 Φ60.3×5.54 L=190 PIPE	1	S31703Ⅲ		1.44	
		接管 Φ60.3×5.54 L=150.5 PIPE	1	S31703Ⅲ		1.14	
	参ASME B 16.5-2020	法兰 2" -Class150 WN/RF S=5.54 FLANGE	2	S31703Ⅱ	2.72	5.44	
I4 O4		引出管 Φ133×4 L=150 OUTLET PIPE	1	S31703		1.9	
		支撑筋板 100×46×4 RIB	3	S31703	0.15	0.45	
	GB/T12459-2017	弯头 1" -Sch80S 90E(L) ELBOW	1	S31703		0.2	
		接管 Φ33.4×4.55 L=143 PIPE	1	S31703		0.5	
		接管 Φ33.4×4.55 L=968 PIPE	1	S31703		3.2	
	参ASME B 16.5-2020	法兰 1" -Class150 WN/RF S=4.55 FLANGE	2	S31703Ⅱ	1.14	2.28	
I3 I6 O3 O6	GB/T12459-2017	弯头 1/2" -Sch80S 90E(L) ELBOW	2	S31603		0.1	
		接管 Φ21.3×3.73 L=127 PIPE	1	S31603		0.21	O3
		接管 Φ21.3×3.73 L=117 PIPE	1	S31603		0.19	O6
		接管 Φ21.3×3.73 L=162 PIPE	2	S31603	0.26	0.52	I3,I6
	参ASME B 16.5-2020	法兰 1/2" -Class150 WN/RF S=3.73 FLANGE	4	S31603Ⅱ	0.91	3.64	
O1~2 O7~9	GB/T12459-2017	弯头 1/2" -Sch80S 90E(L) ELBOW	5	S31703	0.1	0.5	
		接管 Φ21.3×3.73 L=127 PIPE	1	S31703		0.21	O2
		接管 Φ21.3×3.73 L=117 PIPE	4	S31703	0.19	0.76	O1,7~9
	参ASME B 16.5-2020	法兰 1/2" -Class150 WN/RF S=3.73 FLANGE	5	S31703Ⅱ	0.91	4.55	
I1~2		接管 Φ21.3×3.73 L=161 PIPE	5	S31703	0.26	1.3	
I7~9	参ASME B 16.5-2020	法兰 1/2" -Class150 WN/RF S=3.73 FLANGE	5	S31703Ⅱ	0.91	4.55	
E1~14 F1~14	GB/T12459-2017	弯头 DN100-Ⅱ-6 180E(S) ELBOW	20	S30403	/	/	一分为二 DIVIDE INTO TWO
	GB/T12459-2017	管帽 DN100-Ⅱ-6 C PIPE CAP	14	S30403	4.2	58.8	一分为二 DIVIDE INTO TWO
		平面盘管 Φ108×6 L≈49m COIL	14	S30403	373	5222	
		接管 Φ33.4×4.55 L=171 PIPE	28	S30403	0.6	16.8	
	参ASME B 16.5-2020	法兰 1" -Class300 WN/RF S=4.55 FLANGE	28	S30403Ⅱ	1.14	31.92	
SA1~2		接管 Φ528×14 L=250 PIPE	2	Q345R	44.4	88.8	
SV1~4		接管 Φ89×4 L=180 PIPE	4	S31703	1.65	6.6	
C51 C52	HG/T20631-2009	缠绕垫 D80-150-T4.5 GASKET	2	S31703+G.F.	/	/	
	HG/T20634-2009	螺母 M16 NUT	16	30CrMoA	0..05	0.8	
	HG/T20634-2009	全螺纹螺柱 M16×105 STUD	8	35CrMoA	0.168	1.344	
	ASME B 16.5-2020	法兰盖 3" -Class150 BL/RF BLIND FLANGE	2	S31703Ⅱ	4.09	8.18	
		接管 Φ88.9×7.62 L=211.5 PIPE	2	S31703	3.3	6.6	
	ASME B 16.5-2020	法兰 3" -Class150 WN/RF S=7.62 FLANGE	2	S31703Ⅱ	5.22	10.44	
C42 C61 C62	HG/T20631-2009	缠绕垫 D80-150-T4.5 GASKET	3	S31703+G.F.	/	/	
	HG/T20634-2009	螺母 M16 NUT	24	30CrMoA	0.05	1.2	
	HG/T20634-2009	全螺纹螺柱 M16×105 STUD	12	35CrMoA	0.168	2.016	
	参ASME B 16.5-2020	法兰盖 3" -Class150 BL/RF BLIND FLANGE	3	S31703Ⅱ	4.09	12.27	
		夹套接管 Φ88.9×7.62 L=249 JACKETED PIPE	3	S31703	3.6	10.8	
		接管 Φ60.3×8.74 L=211 PIPE	3	S31703	2.2	6.6	
	SH/T3426-2014	夹套管法兰 2"x3" -Class150-WN/RF-8.74 FLANGE	3	S31703Ⅱ	5.8	17.4	
C41	HG/T20631-2009	缠绕垫 D80-150-T4.5 GASKET	1	S31603+G.F.		/	
	HG/T20634-2009	螺母 M16 NUT	8	30CrMoA	0.05	0.4	
	HG/T20634-2009	全螺纹螺柱 M16×105 STUD	4	35CrMoA	0.168	0.672	
	参ASME B 16.5-2020	法兰盖 3" -Class150 BL/RF BLIND FLANGE	1	S31603Ⅱ		4.09	
		夹套接管 Φ88.9×7.62 L=330 JACKETED PIPE	1	S31603		4.8	
		接管 Φ60.3×8.74 L=286 PIPE	1	S31603		3.2	
	SH/T3426-2014	夹套管法兰 2"x3" -Class150-WN/RF-8.74 FLANGE	1	S31603Ⅱ		5.8	
C32	HG/T20631-2009	缠绕垫 D50-150-T4.5 GASKET	1	S31703+G.F.		/	
	HG/T20634-2009	螺母 M16 NUT	8	30CrMoA	0.05	0.4	
	HG/T20634-2009	全螺纹螺柱 M16×95 STUD	4	35CrMoA	0.152	0.608	
	ASME B 16.5-2020	法兰盖 2" -Class150 BL/RF BLIND FLANGE	1	S31703Ⅱ		1.82	
	ASME B 16.5-2020	法兰 2" -Class150 LWN/RF H=279 FLANGE	1	S31703Ⅱ		7.48	
C31	HG/T20631-2009	缠绕垫 D50-150-T4.5 GASKET	1	S31603+G.F.		/	
	HG/T20634-2009	螺母 M16 NUT	8	30CrMoA	0.05	0.4	
	HG/T20634-2009	全螺纹螺柱 M16×95 STUD	4	35CrMoA	0.152	0.608	
	ASME B 16.5-2020	法兰盖 2" -Class150 BL/RF BLIND FLANGE	1	S31603Ⅱ		1.82	
	ASME B 16.5-2020	法兰 2" -Class150 LWN/RF H=358 FLANGE	1	S31603Ⅱ		9.15	
C13 C14 C15	HG/T20631-2009	缠绕垫 D40-150-T4.5 GASKET	3	S31703+G.F.	/	/	
	HG/T20634-2009	螺母 M14 NUT	24	30CrMoA	0.035	0.84	
	HG/T20634-2009	全螺纹螺柱 M14×90 STUD	12	35CrMoA	0.102	1.224	
	ASME B 16.5-2020	法兰盖 1 1/2" -Class150 BL/RF BLIND FLANGE	3	S31703Ⅱ	1.36	4.08	
	ASME B 16.5-2020	法兰 1 1/2" -Class150 LWN/RF H=279 FLANGE	3	S31703Ⅱ	5.4	16.2	
C11 C12	HG/T20631-2009	缠绕垫 D40-150-T4.5 GASKET	2	S31603+G.F.	/	/	
	HG/T20634-2009	螺母 M14 NUT	16	30CrMoA	0.035	0.56	
	HG/T20634-2009	全螺纹螺柱 M14×90 STUD	8	35CrMoA	0.102	0.816	
	ASME B 16.5-2020	法兰盖 1 1/2" -Class150 BL/RF BLIND FLANGE	2	S31603Ⅱ	1.36	2.72	
	ASME B 16.5-2020	法兰 1 1/2" -Class150 LWN/RF H=279 FLANGE	1	S31603Ⅱ		5.4	C12
	ASME B 16.5-2020	法兰 1 1/2" -Class150 LWN/RF H=355 FLANGE	1	S31603Ⅱ		6.6	C11
M03~04	HG/T21521-2014	人孔 RF X1-(W.D-5525)600-16 MANHOLE	2	组合件 ASSEMBLY	447	894	S=14
M01~02	参HG/T21521-2014	人孔 RF I-(W.D-S31703+G.F.)600-16 MANHOLE	2	组合件(S31703) ASSEMBLY	447	894	S=14

N06	NB/T11025-2022	补强圈 dN350×14-C REINFORCING PAD	1	S31703		20.6	
	ASME B 16.5-2020	法兰 14" -Class150 WN/RF S=12 FLANGE	1	S31703Ⅱ		51.8	
		封口板 Φ457/Φ357×24 SEALING PLATE	1	S31703		4.1	
		夹套接管 Φ457×12 L=200 JACKETED PIPE	1	S31703		29	
		接管 Φ355.6×12 L=283.5 PIPE	1	S31703		29.1	
	SH/T3426-2014	夹套管法兰 14"x18" -Class300-WN/RF-12 FLANGE	1	S31703Ⅱ		152	
N05		筋板Ⅱ δ=6 RIB Ⅱ	1	S31703		2.6	
		筋板Ⅰ δ=6 RIB Ⅰ	2	S31703	1.3	2.6	
		防涡流挡板 ø400X6 BREAKING VORTEX PLATE	1	S31703		6	
		引出管 Φ424×12 L=150 OUTLET PIPE	1	Q345R		18.3	
		支撑筋板 100×61×6 RIB	3	S31703	0.29	0.87	
		堵封口 Φ273/Φ221×9.27 H=70 PIPE CAP	1	S31703		4	
		夹套接管 Φ273×9.27 L=2236 JACKETED PIPE	1	S31703		136	
	GB/T12459-2017	弯头 10" -Sch40S 90E(S) JACKETED ELBOW	1	S31703		36.4	
		夹套接管 Φ273×9.27 L=878 JACKETED PIPE	1	S31703		53.5	
	NB/T11025-2022	补强圈 dN200×14-C REINFORCING PAD	1	S31703		9.5	
		接管 Φ219.1×8.18 L=2248 PIPE	1	S31703		96.6	
	GB/T12459-2017	弯头 8" -Sch40S 90E(L) ELBOW	1	S31703		20.7	
		接管 Φ219.1×8.18 L=927 PIPE	1	S31703		40	
	SH/T3426-2014	夹套管法兰 8"x10" -Class150-WN/RF-8.18 FLANGE	1	S31703Ⅱ		27	
	ASME B 16.5-2020	法兰 2" -Class150 WN/RF S=8.74 FLANGE	1	S31603Ⅱ		2.72	
N04		夹套接管 Φ88.9×7.62 L=224 JACKETED PIPE	1	S31603		3.5	
		接管 Φ60.3×8.74 L=336.5 PIPE	1	S31603		3.8	
	SH/T3426-2014	夹套管法兰 2"x3" -Class300-WN/RF-8.74 FLANGE	1	S31603Ⅱ		9	
N03		夹套接管 Φ88.9×7.62 L=222 JACKETED PIPE	1	S31703Ⅲ		3.4	
		接管 Φ60.3×8.74 L=187 PIPE	1	S31703Ⅲ		2.1	
	SH/T3426-2014	夹套管法兰 2"x3" -Class300-WN/RF-8.74 FLANGE	1	S31703Ⅱ		9	
N02		封口板 Φ610/Φ510×24 SEALING PLATE	1	S31603		16.9	
		夹套接管 Φ610×14 L=210 JACKETED PIPE	1	S31603		43.7	
	NB/T11025-2022	补强圈 dN500×14-C REINFORCING PAD	1	S31603		36.3	
		接管 Φ508×12 L=203 PIPE	1	S31603		30.1	
	SH/T3426-2014	夹套管法兰 20"x24" -Class150-WN/RF-12 FLANGE	1	S31603Ⅱ		193	
	ASME B 16.5-2020	法兰 2" -Class150 WN/RF S=8.74 FLANGE	1	S31703Ⅱ		2.72	
N01		夹套接管 Φ88.9×7.62 L=236 JACKETED PIPE	1	S31703Ⅲ		3.6	
		接管 Φ60.3×8.74 L=346.5 PIPE	1	S31703Ⅲ		3.9	
	SH/T3426-2014	夹套管法兰 2"x3" -Class150-WN/RF-8.74 FLANGE	1	S31703Ⅱ		5.8	
24	GB/T21574-2018	尾耳 APA-4-35 H=300 TAIL LUG	1	组合件 ASSEMBLY		19	
23		支撑管 Φ133×8 L=2382 PIPE	1	20		59	
22	GB/T21574-2018	侧耳吊耳 SP-8-35 SIDE PLATE-TYPE LUG	2	Q235B/S31603	76	152	
21	GB/T25198-2023	上封头 EHA1800×14(12.1) UPPER HEAD	1	S31603		396	h=25
20	HG/T21639-2005	塔顶吊柱 W=500 S=1600 TOP DAVIT FOR TOWERS	1	组合件 ASSEMBLY		310	
19		塔外预焊件 PRE-WELDED COMPONENTS OUTSIDE THE TOWER	1	组合件 ASSEMBLY		~1000	HOLD
18	由内件厂提供	塔内预焊件 PRE-WELDED COMPONENTS INSIDE THE TOWER	1	组合件 ASSEMBLY		~500	
17		筒体Ⅲ DN1800×12 L=10775 SHELL Ⅲ	1	S31603		5837	
16		加强圈 L100×100×10 L≈6055 STIFFENING RING	6	S31603	92.5	555	
15		筒体Ⅱ DN1800×12 L=5000 SHELL Ⅱ	1	S31703		2709	
14		筒体Ⅰ DN1800×14 L=2975 SHELL Ⅰ	1	S31703		1882	
13	060-STD-EQ12.0	Ⅳ型保温圈 W=60 δ=4 TYPE Ⅳ INSULATION SUPPORT	1	S31603		10.5	
12	060-STD-EQ12.0	Ⅰ型保温圈 W=100 δ=6 TYPE Ⅰ INSULATION SUPPORT	1	S31603		29.5	
11	GB/T25198-2023	下封头 EHA1800×14(12.1) LOWER HEAD	1	S31703		396	h=25
10		过渡段 DN1800/DN1863×14 L=769 TRANSITION SHELL	1	S31703		492	
9		裙座筒体 DN1863/DN2400×14 L=6595 SKIRT SHELL	1	Q345R		4857	
8	STD-EQ-001.1	压力容器铭牌 NAMEPLATE	1	S30408		0.25	
7	STD-EQ-001.20	铭牌托架(Ⅰ型)-V-50 NAMEPLATE BRACKET	1	组合件 ASSEMBLY		2.2	
6		接地板 110×50×10 EARTH PLATE	2	S30408	0.45	0.9	
5		垫板 δ=20 PAD	20	Q345R	2.3	46	
4		盖板 Φ2728/Φ2404×30 COVER PLATE	1	Q345R		308	
3		筋板 δ=20 RIBBED PLATE	40	Q345R	7.4	29.6	
2		基础环板 Φ2728/Φ2208×30 BASE RING PLATE	1	Q345R		475	
1	JKB-S2504-01	基础模板 TEMPLATE	1	组合件 ASSEMBLY		365	

件号 NO.	图号或标准号 DWG.OR STAND.NO.	名称 DESCRIPTION	数量 QTY.	材料 MATERIAL	单重UNIT 总重TOTAL 质量WEIGHT (kg)		备注 REMARKS
2	2025.5.7	按5.7审图意见					
1	2025.4.16	按4.15审图意见					
0	2025.2.20	按工程图 REV.D00					

版次 REV.	日期 DATE	说明 DESCRIPTION	设计 DSGD	校核 CHEKD	审核 APPRD	批准 AUTHD	标准化 STANDARDIZATION

本图纸为江阴市科博机械有限公司财产，未经本企业许可不得转让给第三者或复制。
THIS DRAWING IS THE PROPERTY OF JIANGYIN KEBO MACHINERY CO.,LTD., UNAUTHORIZED DISCLOSURE TO ANY THIRD PARTY OR DUPLICATION IS NOT PERMITTED.

江阴市科博机械有限公司
Jiangyin Kebo Machinery Co.,Ltd.

用户 CLIENT	PT PETRO OXO NUSANTARA		
图名 DRAWING NAME	2 NPC塔 NPC TOWER 装配图/ASSEMBLY DRAWING ITEM NO: T-2402	项目 PROJ.	30000 TPA NEOPENTYL GLYCOL PROJECT
		装置 PLANT:	Neopentyl Glycol Plant
比例 SCALE	1 :50	第 2 张，共 3 张 PAGE 2 OF 3	图号 DRAWING NO. JKB-S2504-00(2/2)